~~THIS DRAWING IS UNPUBLISHED~~. RELEASED FOR PUBLICATION 2014
© COPYRIGHT 2014 BY TE Connectivity AMP España S.L.U. ALL RIGHTS RESERVED.

REVISIONS

P	LTR	DESCRIPTION	DATE	DWN	APVD
	A	INITIAL RELEASE; ECO-15-003446	04MAR2015	GG	JG

SCALE 2:1

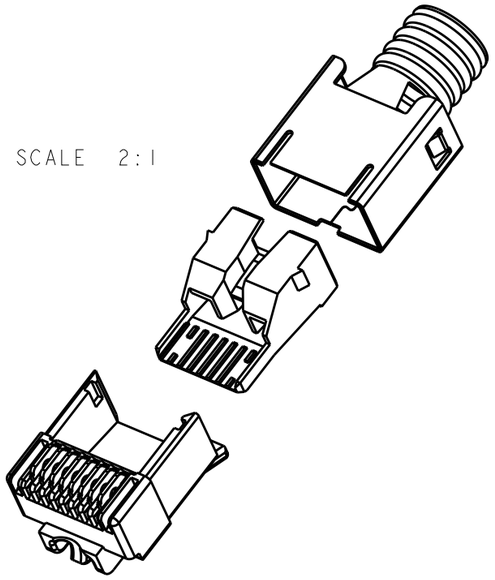

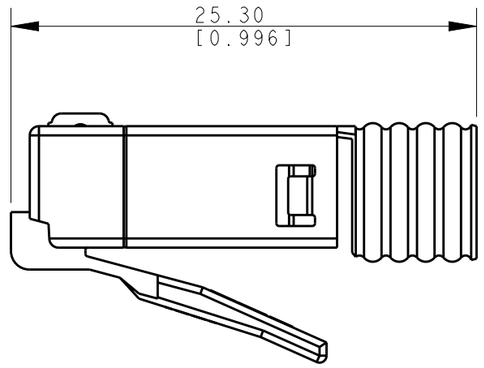

UNEXPLODED VIEW

1. MATERIAL: HOUSING - 94V-0 RATED POLYCARBONATE CLEAR
TERMINAL - 0.36 [.014] THICK PHOSPHOR BRONZE PLATED WITH 0.178 µm [.000007] THICK GOLD IN LOCALIZED AREA, OVER 0.762 µm [.000030] THICK PALLADIUM NICKEL IN LOCALIZED PLATE AREA OVER 2.54 µm [.000100] THICK NICKEL ON ENTIRE CONTACT.
WIRE HOLDER - POLYCARBONATE CLEAR.
SHIELD - STAINLESS STEEL WITH 0.8 µm [.000031] MINIMUM NICKEL PLATED.

2. DIMENSIONS ARE NOMINAL UNLESS OTHERWISE SPECIFIED.

3. PLUG WILL ACCEPT A 24-26 AWG STRANDED CONDUCTOR, PROVIDED THE INSULATION CONDUCTOR DIAMETER IS WITHIN 0.89 - 1.09 [.035 - .043]; WITH THE SUM OF DIAMETERS FOR ALL EIGHT CONDUCTORS WITHIN THE CABLE MUST NOT EXCEED 7.8MM [.31 IN]. CABLE JACKET DIAMETER OF 5.1 - 6.0mm [.201-.236 IN].

4. TERMINATED DIMENSION 6.15 [.242] MAXIMUM.

5. PACKAGE 500 ASSEMBLIES, 500 WIRE HOLDERS, AND 500 SHIELDS.

6. PACKAGE 100 ASSEMBLIES, 100 WIRE HOLDERS AND 100 SHIELDS.

7. SLIM-LINE MODULAR PLUG BOOT, PN 2153257-1 MAY BE USED WITH PLUG KIT ASSEMBLY SHOWN.

8. UL RECOGNIZED: FILE NUMBER E81956.

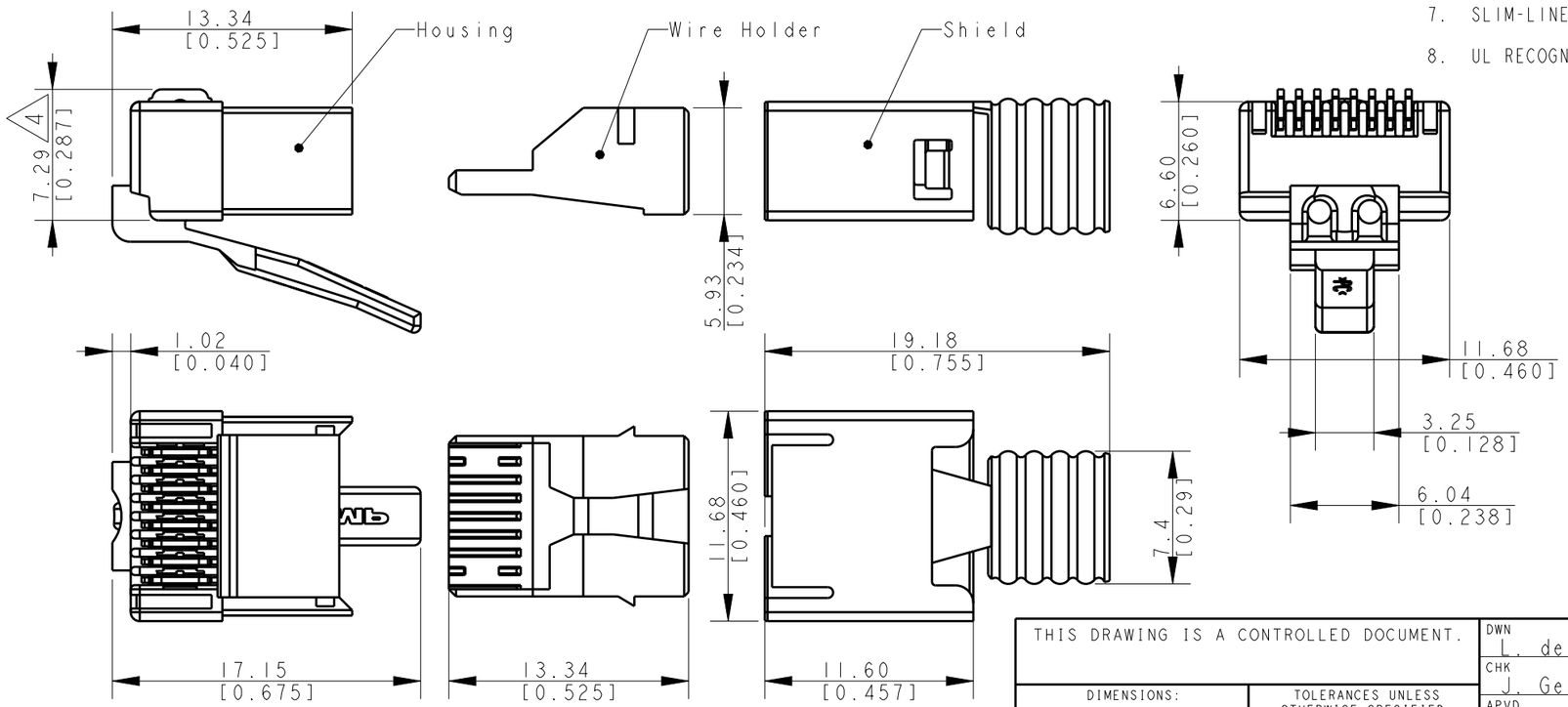

6	5-2111979-3
5	5-2111979-2
PACKAGE	PART NO.

THIS DRAWING IS A CONTROLLED DOCUMENT.

DIMENSIONS: mm

TOLERANCES UNLESS OTHERWISE SPECIFIED:
0 PLC ±-
1 PLC ±-
2 PLC ±-
3 PLC ±-
4 PLC ±-
ANGLES ±-
2

MATERIAL - 1 -

FINISH - 1 -

DWN 26NOV2014 L. de Dios
CHK 26NOV2014 J. Geniac
APVD -
PRODUCT SPEC -
APPLICATION SPEC 114-93037
WEIGHT -

TE Connectivity

NAME CAT6 RJ45 MOD PLUG STRANDED CONDUCTOR CABLE RANGE 5.1 - 6.0

SIZE	CAGE CODE	DRAWING NO	RESTRICTED TO
A3	-	C-2111979	-

Customer Drawing | SCALE 3:1 | SHEET 1 OF 1 | REV A

1470-19 (3/13)